CERTIFIED ISO 9001:2015 COMPANY

Dymaxa
Lift Eng. Co.

ELEVATOR

Solutions



"ALL TYPES OF LIFT PARTS MANUFACTURER AND TRADERS"

www.dymaxalifeng.com



SAFETY SET

- ☑ Sheet metal Heavy duty safety clutch Double side clutch system Used in high-rise lift.



SAFETY SET

CANTILEVER safety set

- ☑ Use in small space
- ☑ L type opening
- ☑ Pit less space

SAFETY SET

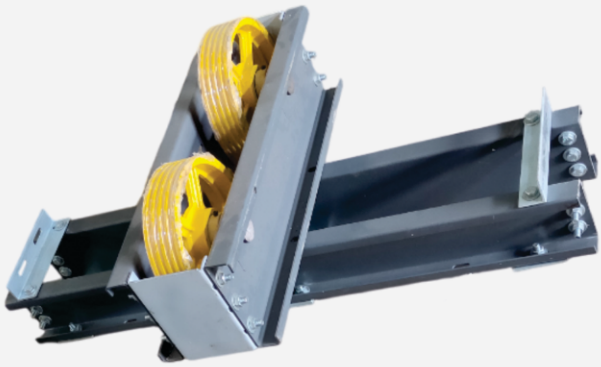

MRL Safety specification

Sheet metal Heavy duty

Progressive safety set.

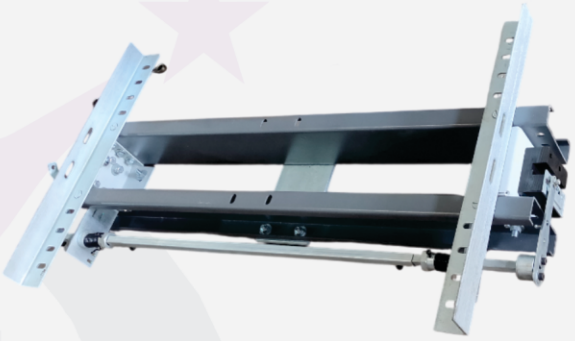

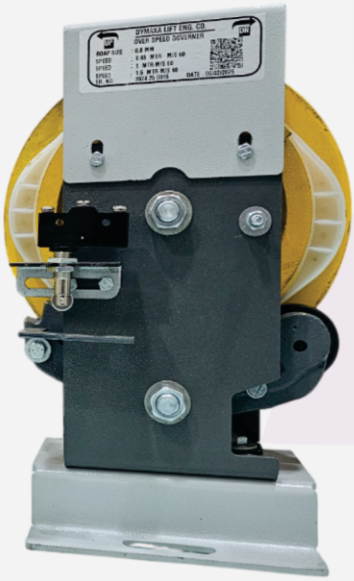

OSG SET

It is an elevator device which acts as a stop device in case the elevator runs beyond the rated speed. This device must be installed in the traction elevators and roped hydraulic elevators.

Features :

- ☑ Sturdy construction
- ☑ Corrosion free
- ☑ Perfect finish

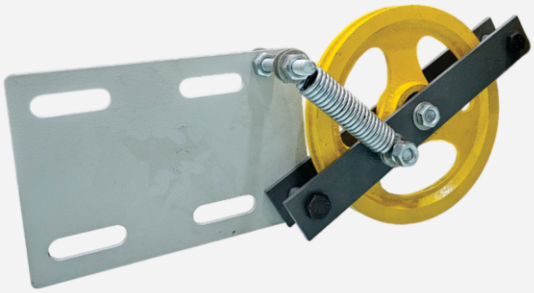

MRL SAFETY SET



- ☑ Safety specification Sheet metal Heavy duty Progressive safety set

AUTODOOR HEADER

- ☑ **Auto Door Opening Size 2 Penal** 700/800/900/1000mm
- ☑ **Opening Size 4 Penal** 700/800/900/1000 to 1400mm
- ☑ **Vision Type** : Non Vision / Small Vision / Half Vision / Full Vision
- ☑ Smooth ride
- ☑ Easy installation
- ☑ Dedicated ac PMSM motor and drive with ancoder
- ☑ Wire roap less car
- ☑ Wider belt size for better strength

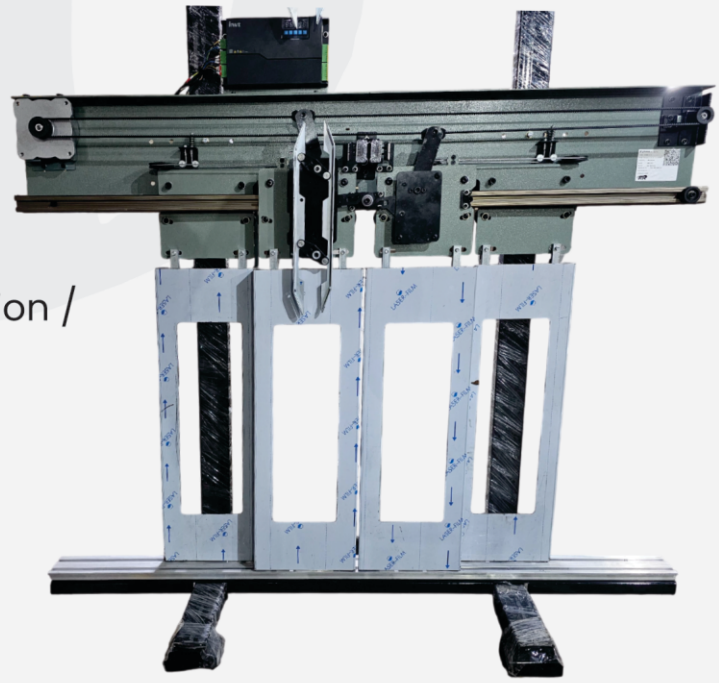

HEADER

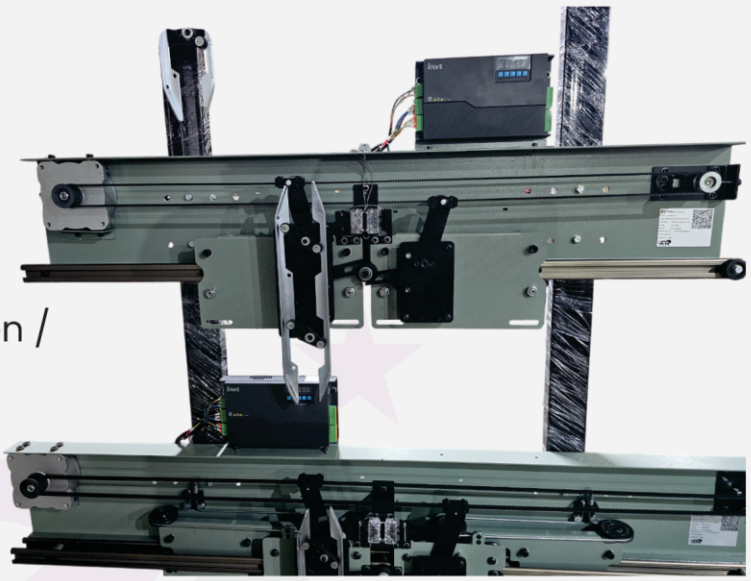

- ☑ **Auto Door Opening Size 2 Penal**
  700/800/900/1000mm
- ☑ **Opening Size 4 Penal**
  700/800/900/1000 to 1400mm
- ☑ **Vision Type** : Non Vision / Small Vision / Half Vision / Full Vision
- ☑ Smooth ride
- ☑ Easy installation
- ☑ Dedicated ac PMSM motor and drive with ancoder
- ☑ Wire roap less car
- ☑ Wider belt size for better strength

HEADER



- ☑ **Auto Door Opening Size 2 Penal**
  700/800/900/1000mm
- ☑ **Opening Size 4 Penal**
  700/800/900/1000 to 1400mm
- ☑ **Vision Type** : Non Vision / Small Vision / Half Vision / Full Vision
- ☑ Smooth ride
- ☑ Easy installation
- ☑ Dedicated ac PMSM motor and drive with ancoder
- ☑ Wire roap less car
- ☑ Wider belt size for better strength



CABIN

- ☑ Square Glass Cabin
- ☑ S.S Round Glass Cabin
- ☑ Five Side Glass Cabin
- ☑ Power Coted Round Glass Cabin
- ☑ SS Golden Design Cabins
- ☑ SS Rose Gold Design Cabins
- ☑ Designer Cabins
- ☑ SS Design Cabins

CABIN

- ☑ Square Glass Cabin
- ☑ S.S Round Glass Cabin
- ☑ Five Side Glass Cabin
- ☑ Power Coted Round Glass Cabin
- ☑ SS Golden Design Cabins
- ☑ SS Rose Gold Design Cabins
- ☑ Designer Cabins
- ☑ SS Design Cabins

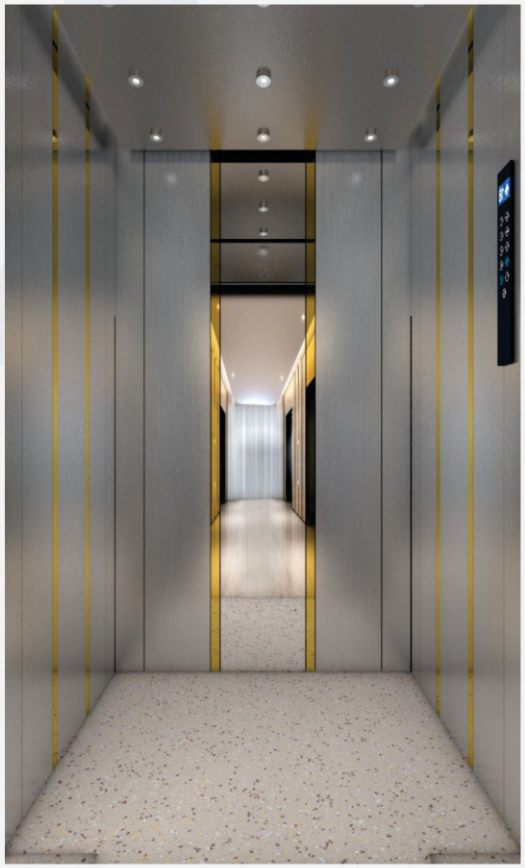

CABIN

- ☑ Square Glass Cabin
- ☑ S.S Round Glass Cabin
- ☑ Five Side Glass Cabin
- ☑ Power Coted Round Glass Cabin
- ☑ SS Golden Design Cabins
- ☑ SS Rose Gold Design Cabins
- ☑ Designer Cabins
- ☑ SS Design Cabins



DIVATOR PULLY

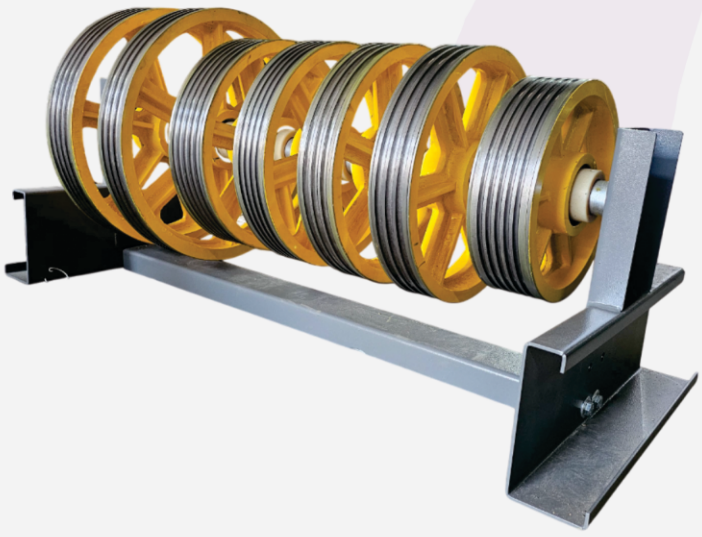

- ☑ 200 x 13 x 3
- ☑ 200 x 8 x 4
- ☑ 300 x 8 x 4
- ☑ 300 x 13 x 3
- ☑ 300 x 13 x 4
- ☑ 320 x 13 x 3
- ☑ 320 x 8 x 4
- ☑ 320 x 8 x 5
- ☑ 410 x 13 x 3
- ☑ 410 x 13 x 4
- ☑ 410 x 8 x 4
- ☑ 410 x 8 x 5
- ☑ 510 x 13 x 3
- ☑ 510 x 13 x 4
- ☑ 510 x 8 x 4
- ☑ 510 x 8 x 5

COP LOP SET



- ☑ Square Push button
- ☑ Round push button
- ☑ Semi touch button
- ☑ Touch button
- ☑ Seven segment display
- ☑ Dot matrix display
- ☑ TFT display
- ☑ LCD display

COP

- ☑ Square Push button
- ☑ Round push button
- ☑ Semi touch button
- ☑ Touch button
- ☑ Seven segment display
- ☑ Dot matrix display
- ☑ TFT display
- ☑ LCD display



COP LOP

- ☑ Square Push button
- ☑ Round push button
- ☑ Semi touch button
- ☑ Touch button
- ☑ Seven segment display
- ☑ Dot matrix display
- ☑ TFT display
- ☑ LCD display





COP LOP

- ☑ Square Push button
- ☑ Round push button
- ☑ Semi touch button
- ☑ Touch button
- ☑ Seven segment display
- ☑ Dot matrix display
- ☑ TFT display
- ☑ LCD display

MAINTANENCE BOX



JUNCTION BOX



FASTNER



HEADER HANGER BOLT

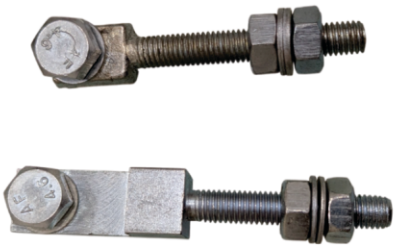

JUNCTION AND INCHAP COMBO



FIREMAN AND ALARM COMBO



GUID CLIP



REC BOLT



PAN



GUID CLIP



OTIS THIMBLE



LOLAC THIMBLE



ROAP CLIP



J BOLT

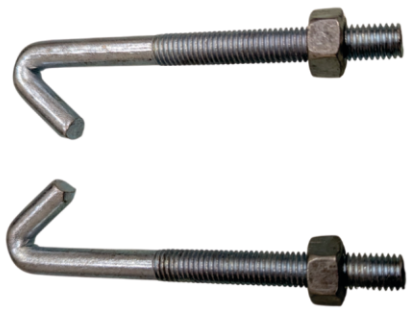

GUN TYPE THIMBLE



GUN TYPE THIMBLE



MAKE IN INDIA

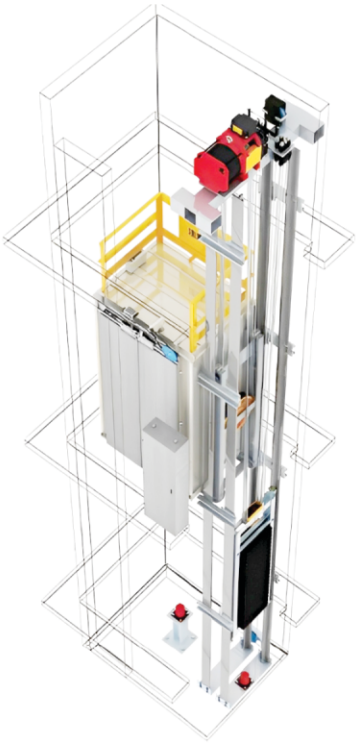



Dymaxa
Lift Eng. Co.

Liftronics Enterprise
ELEVATING YOUR EXCELLENCE
MANUFACTURING AND TRADING OF ELEVATOR PARTS

Kamlesh Bhai +91 99094 20418 | Prakash Bhai +91 98791 18611 | Nikhil Bhai +91 97236 87418 | Rudren Bhai +91 99748 00067

dymaxa2008@gmail.com

www.dymaxalifteng.com

A-11, Zaveri Estate, Nr. Shubh Estate, Singarva Kathwada Road, Kathwada, Ahmedabad - 382418.